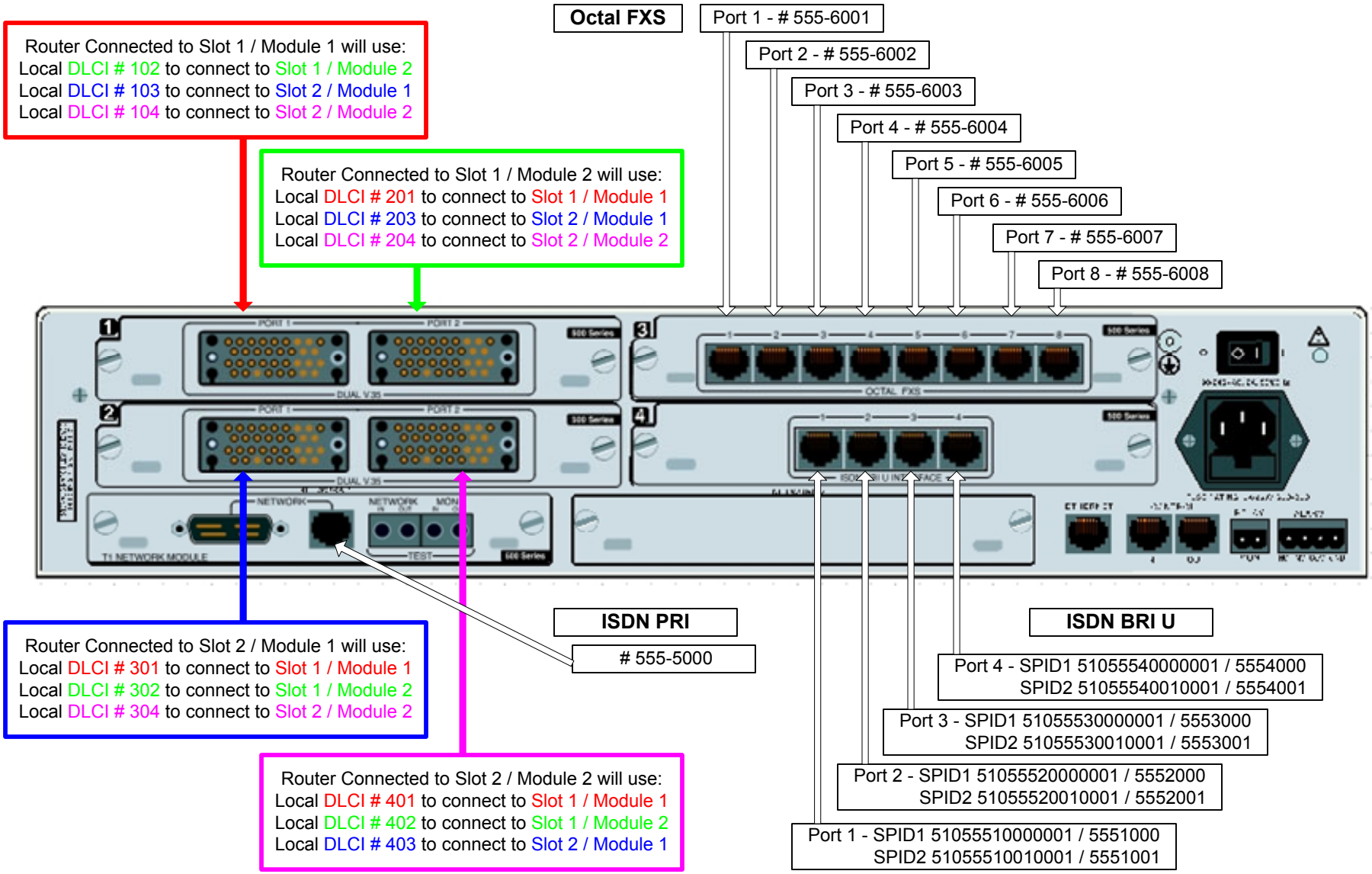Adtran Atlas 550 - Frame-Relay, ISDN, and PSTN Configuration